iREPAIR

LABORATORIO TÉCNICO
MICROSOLDADURA

Title	Duos_Mainboard	
Size D	Document Number <Doc>	Rev A
Date: Wednesday, April 04, 2018	Sheet 1 of 36	

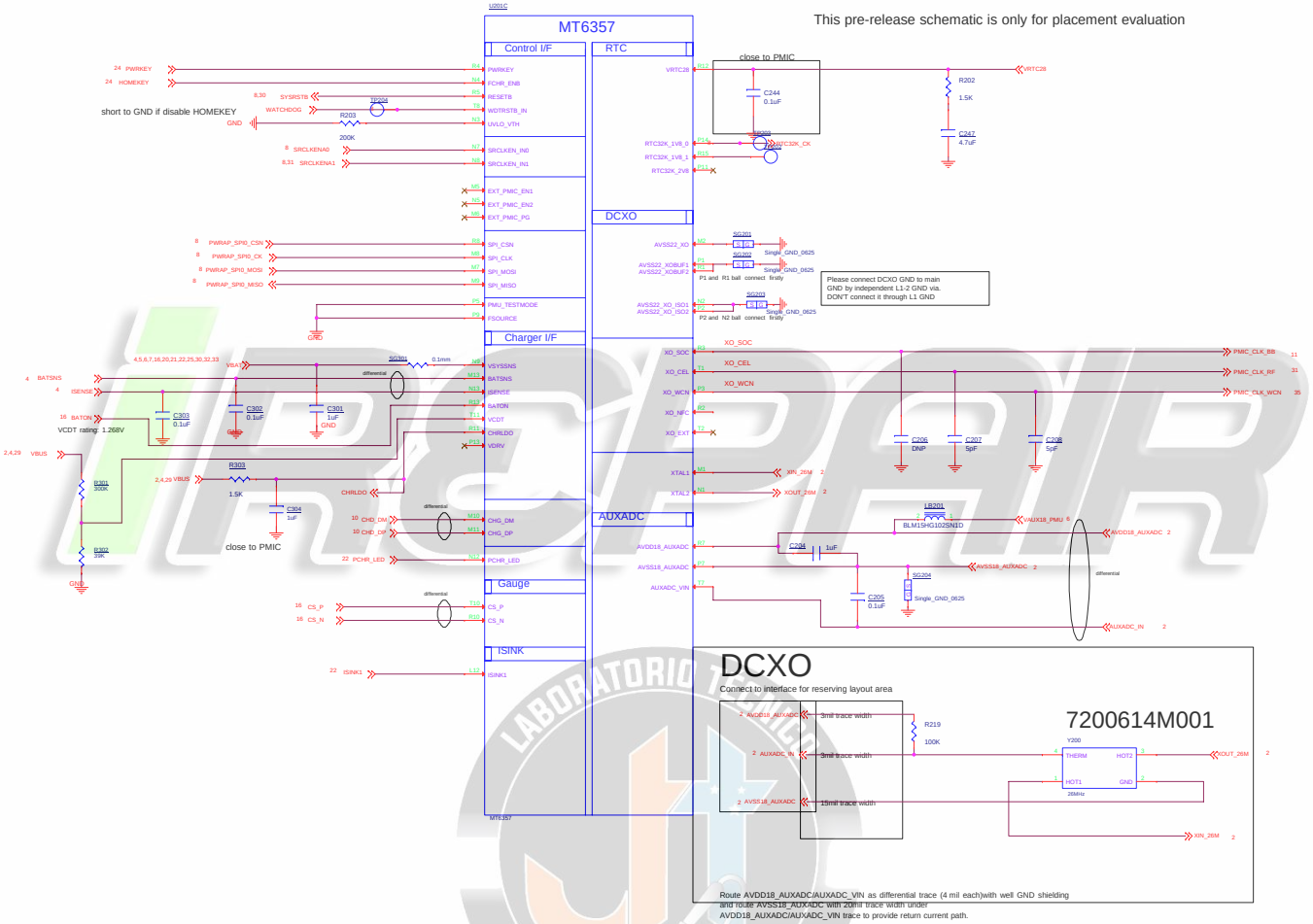

MT6537 control

Title	Duos_Mainboard		
Size D	Document Number <Doc>		Rev A
Date: Wednesday, April 04, 2018	Sheet 2 of 36		

iREPAIR
LABORATORIO TÉCNICO
MICROSOLDADURA

Title	Duos_Mainboard	
Size D	Document Number <Doc>	Rev A
Date: Wednesday, April 04, 2018	Sheet 3 of 36	

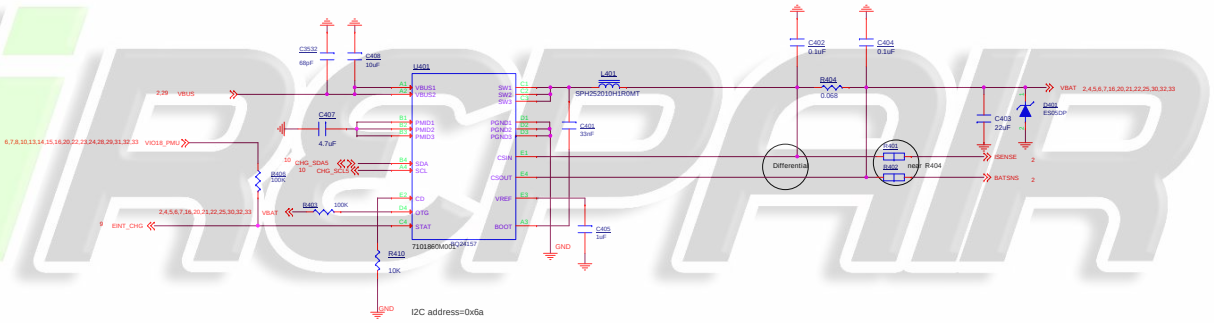

Charger

Title	Duos_Mainboard		
Size D	Document Number <Doc>		Rev A
Date: Wednesday, April 04, 2018	Sheet 4 of 36		

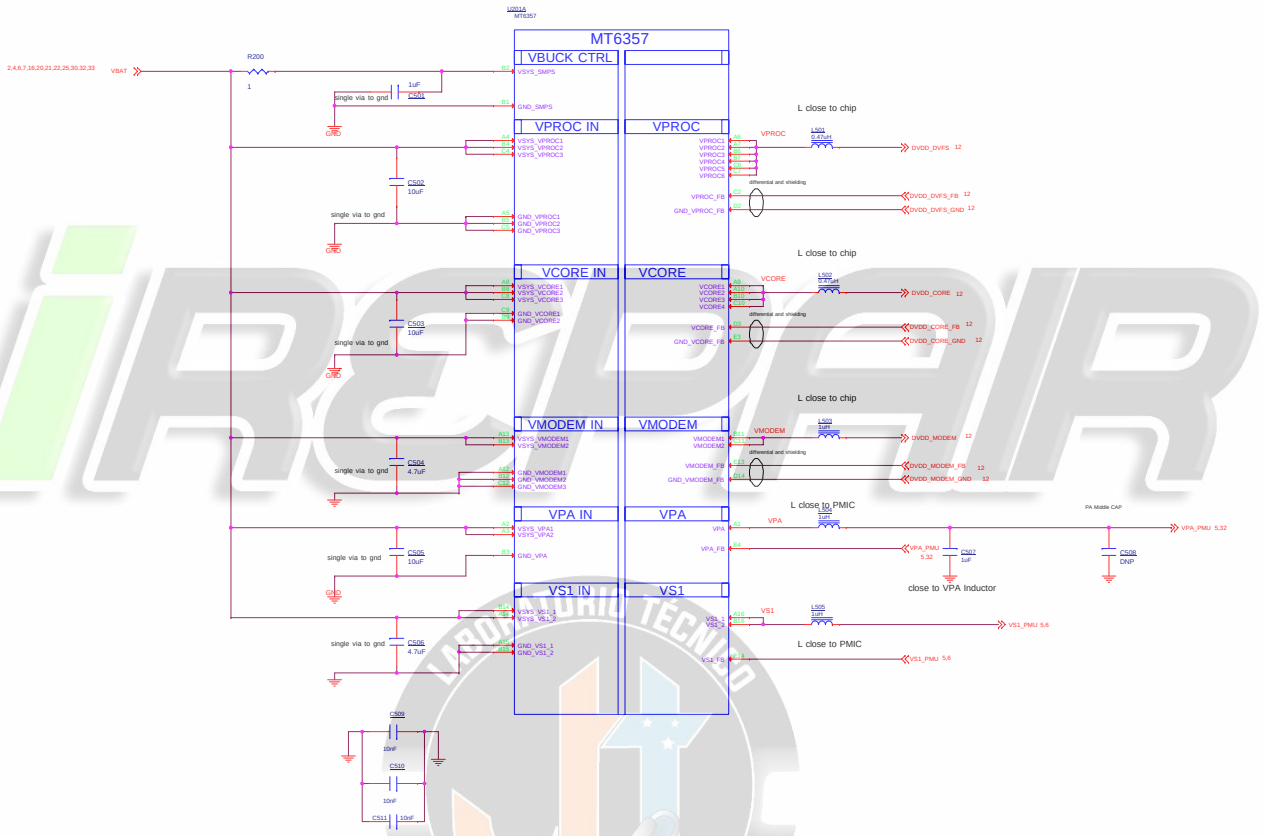

MT6537 buck

Title	Duos_Mainboard		
Size D	Document Number <Doc>		Rev A
Date: Wednesday, April 04, 2018	Sheet 5 of 36		

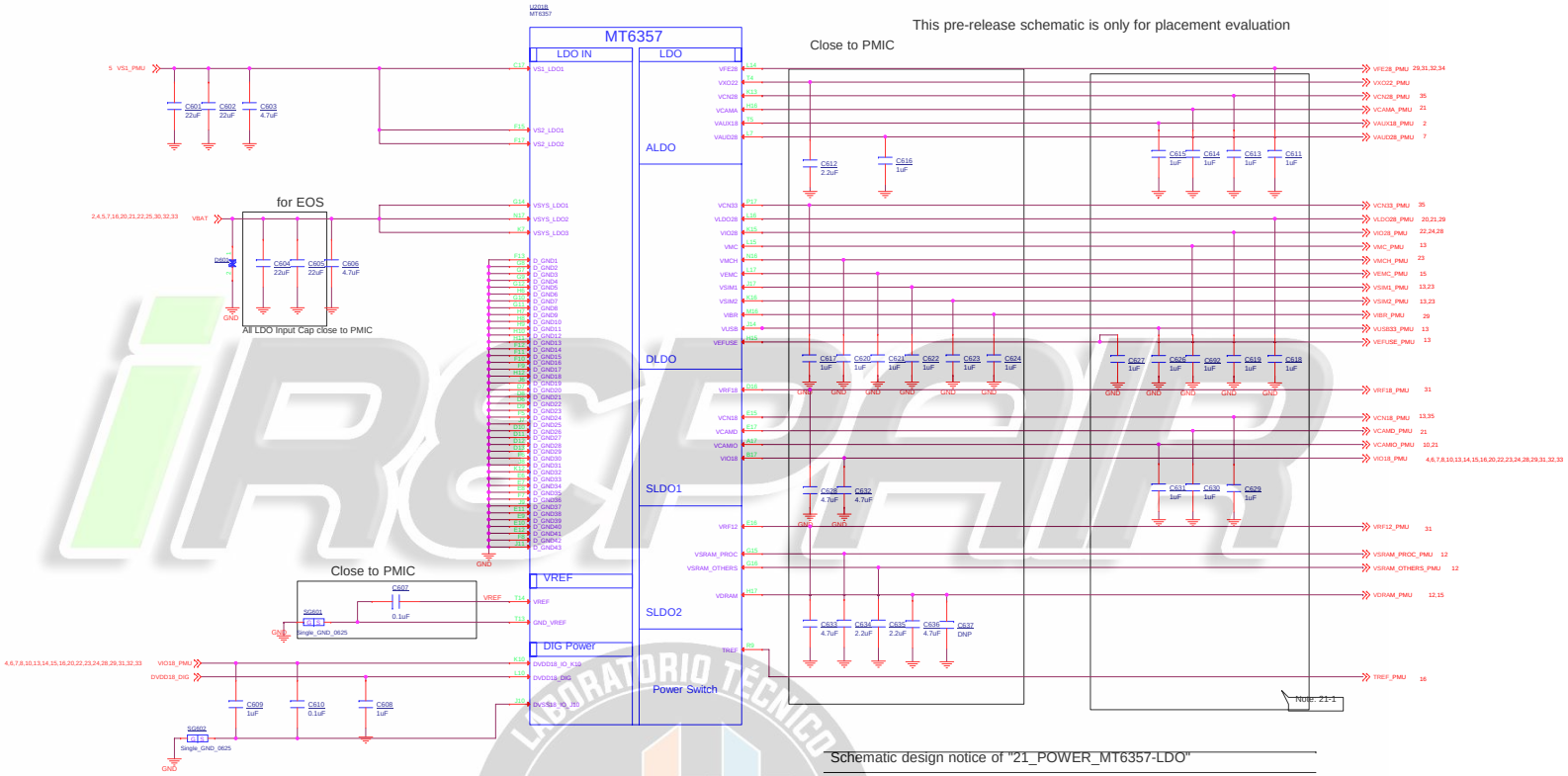

Schematic design notice of "21_POWER_MT6357-LDO"

Note 21-1:

If these power trace can meet LDO layout constraint, these CAP can be NC or removed.

MT6537 LDO

Title	Duos_Mainboard		
Size D	Document Number <Doc>		Rev A
Date: Wednesday, April 04, 2018	Sheet 5 of 36		

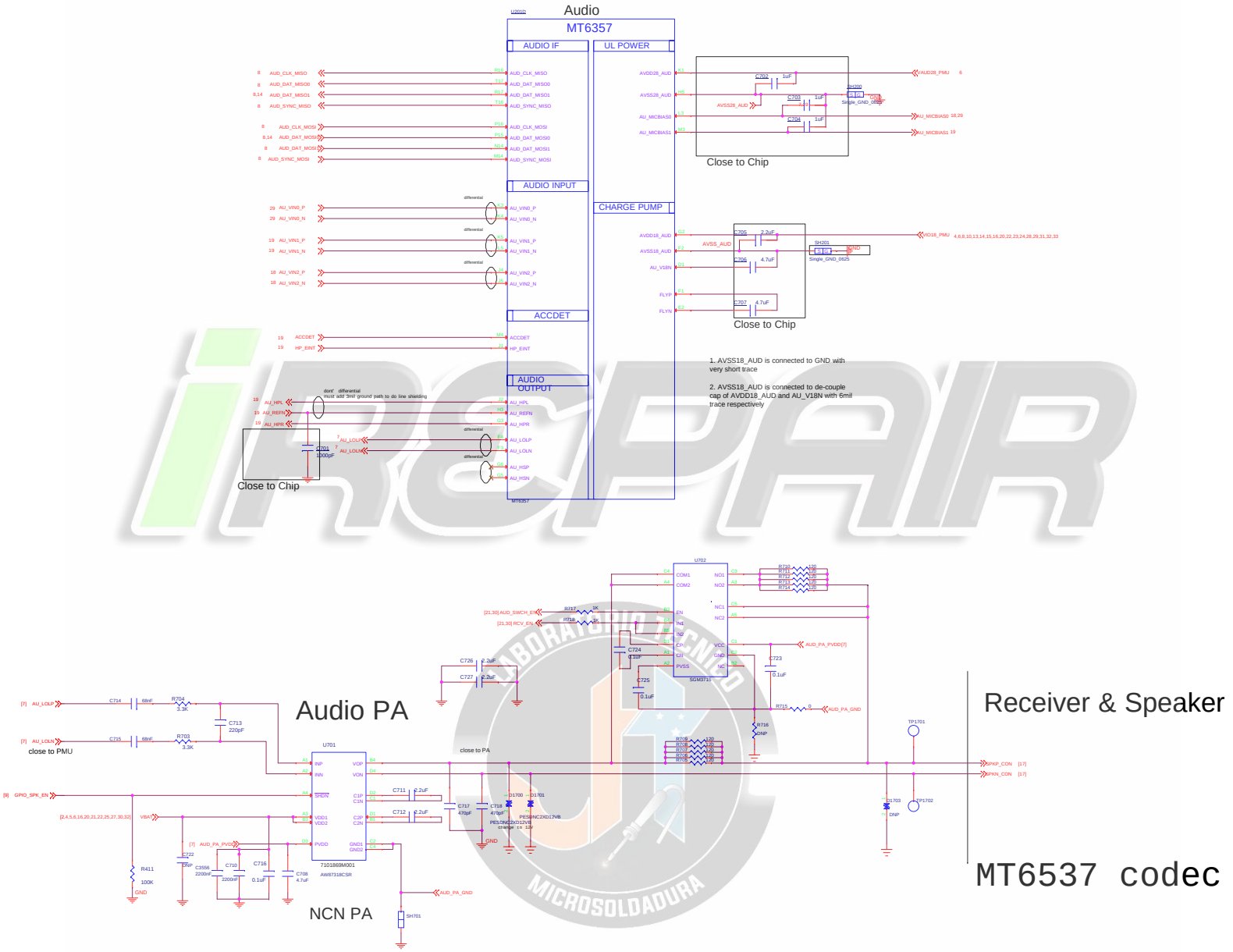

Title	Duos_Mainboard		
Size D	Document Number <Doc>		Rev A
Date: Wednesday, April 04, 2018	Sheet 7 of 36		

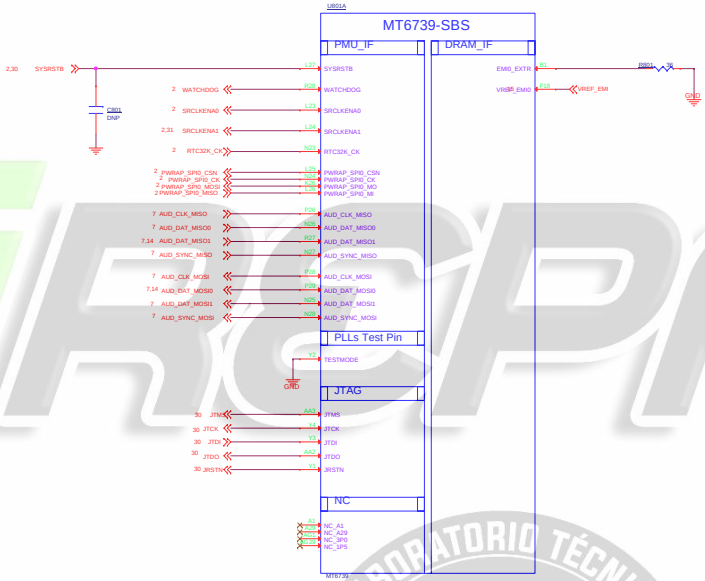

Thermistor / To sense board level temperature

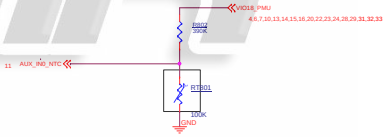

MT6739 control

Title	Duos_Mainboard		
Size D	Document Number <Doc>		Rev A
Date: Wednesday, April 04, 2018	Sheet 8 of 36		

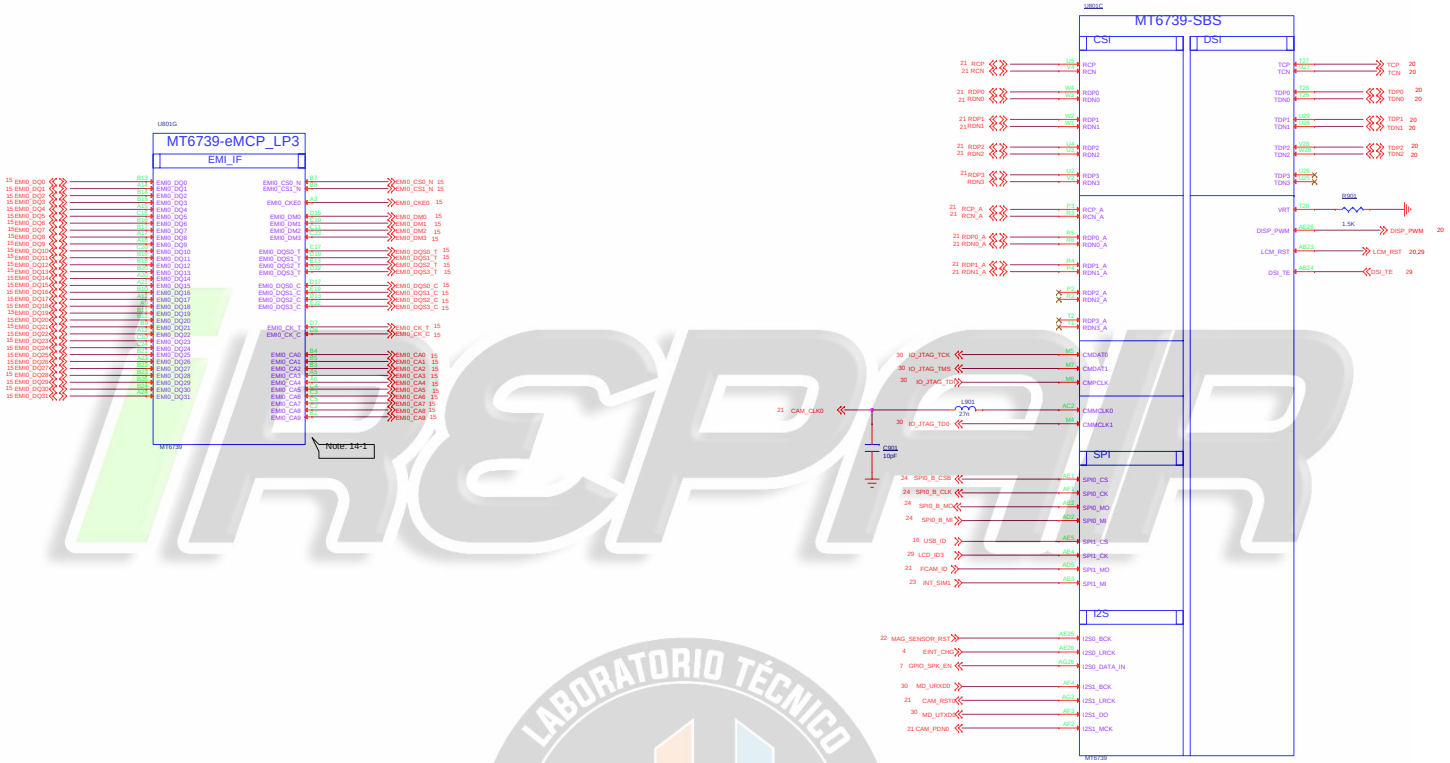

MT6739 EBIF&MIPI

Title	Duos_Mainboard		
Size D	Document Number <Doc>		Rev A
Date: Wednesday, April 04, 2018	Sheet 9 of 36		

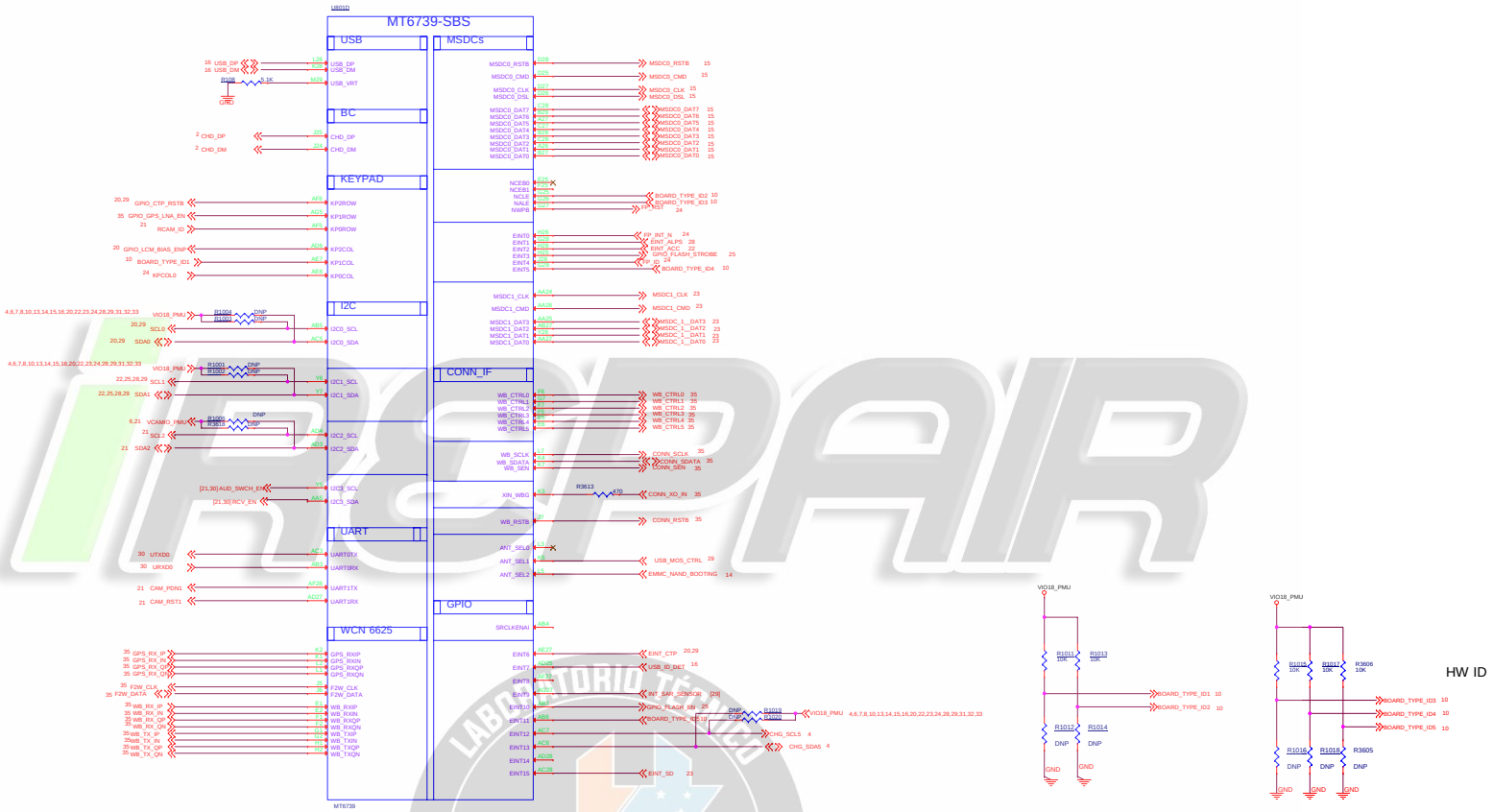

MT6739 GPIO

Title	Duss_Mainboard		
Size D	Document Number <Doc>		Rev A
Date: Wednesday, April 04, 2018	Sheet 10 of 36		

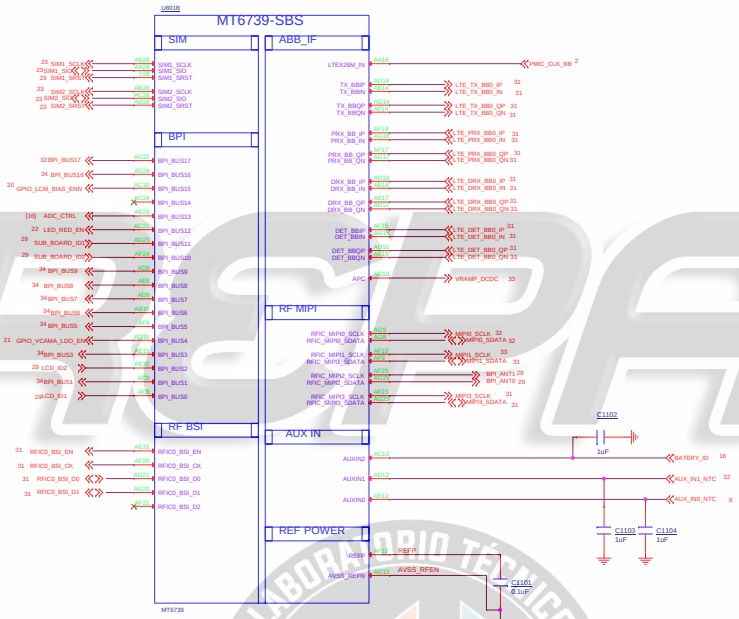

MT6739 RF IF

Title	Duos_Mainboard		
Size D	Document Number <Doc>		Rev A
Date: Wednesday, April 04, 2018	Sheet 11 of 36		

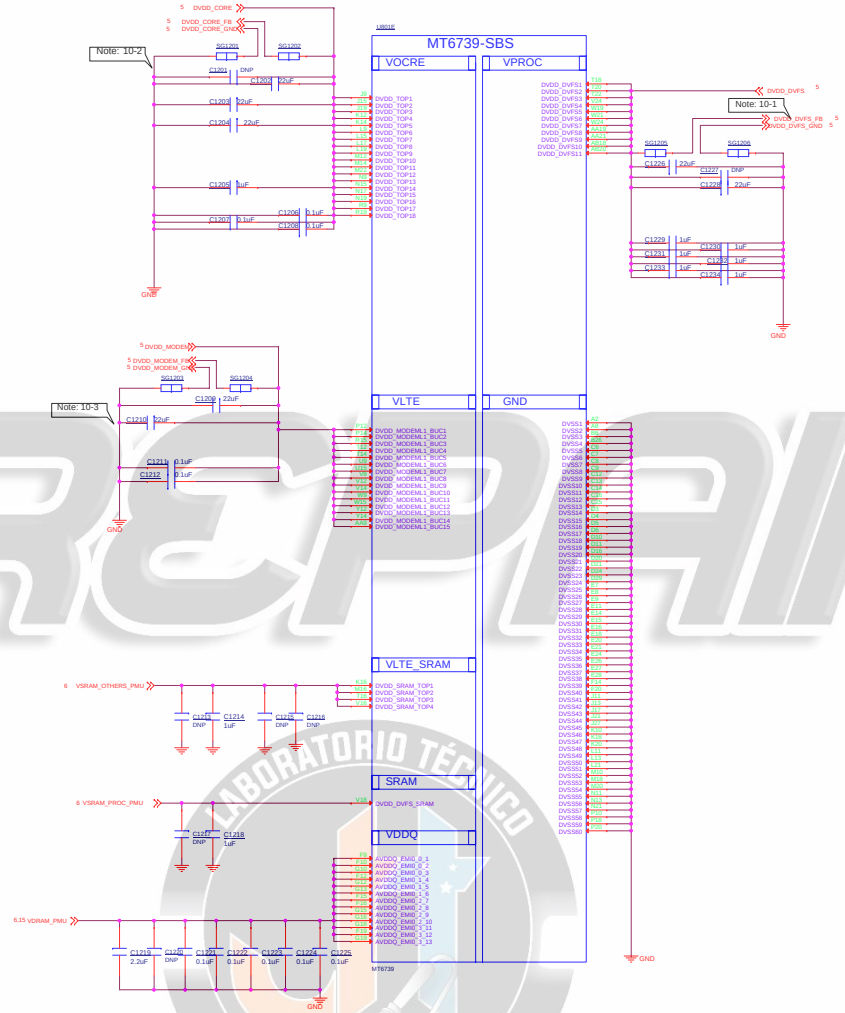

iREPAIR
LABORATORIO TÉCNICO
MICROSOLDADURA

MT6739 power1

Title	Duos_Mainboard		
Size D	Document Number <Doc>		Rev A
Date: Wednesday, April 04, 2018	Sheet 12 of 36		

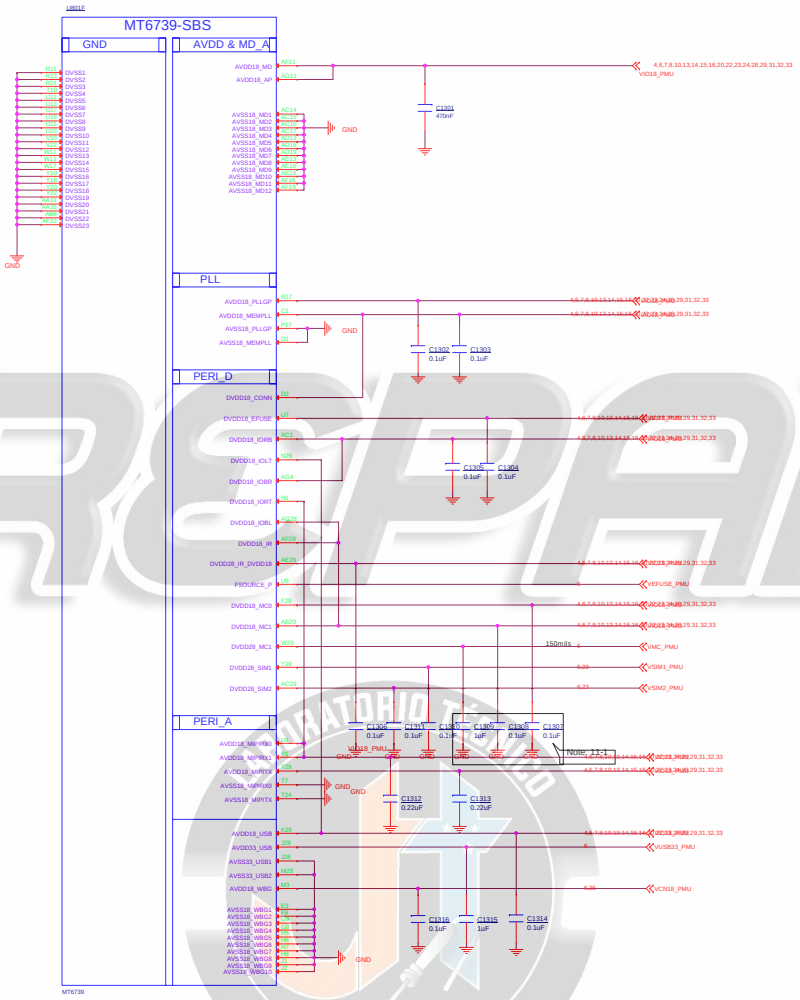

MT6739 power2

Title	Duos_Mainboard		
Size D	Document Number <Doc>		Rev A
Date: Wednesday, April 04, 2018	Sheet 13 of 36		

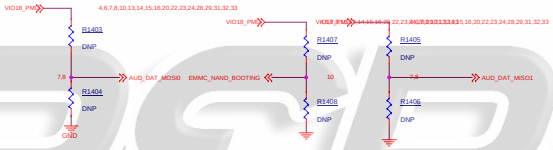

Schematic design notice of "15_BB_HW_Trap" page.

Note 15-1: PWRAP_SPI0_CSN and AUD_DAT_MOSI are JTAG feature in bootstrap.

AUD_DAT_MOSI0	Mode	Note
LO	Default	N/A
HI	Aux Func. trap_MD_JTAG_AP_JTAG	MD JTAG = CMDAT0/CMDAT1/CMPCLK/CMMCLK/CMMCLK1

Note 15-2: ANT_SEL2 and AUD_DAT_MISO1 is storage booting feature in bootstrap.

ANT_SEL2	AUD_DAT_MISO1	Storage Booting
HI	LO	TLC Boot
HI	HI	SLC Boot
LO	LO	eMMC Boot
LO	HI	N/A

MT6739 HW trap

Title	Duss_Mainboard	
Size D	Document Number <Doc>	Rev A
Date: Wednesday, April 04, 2018	Sheet 14 of 36	

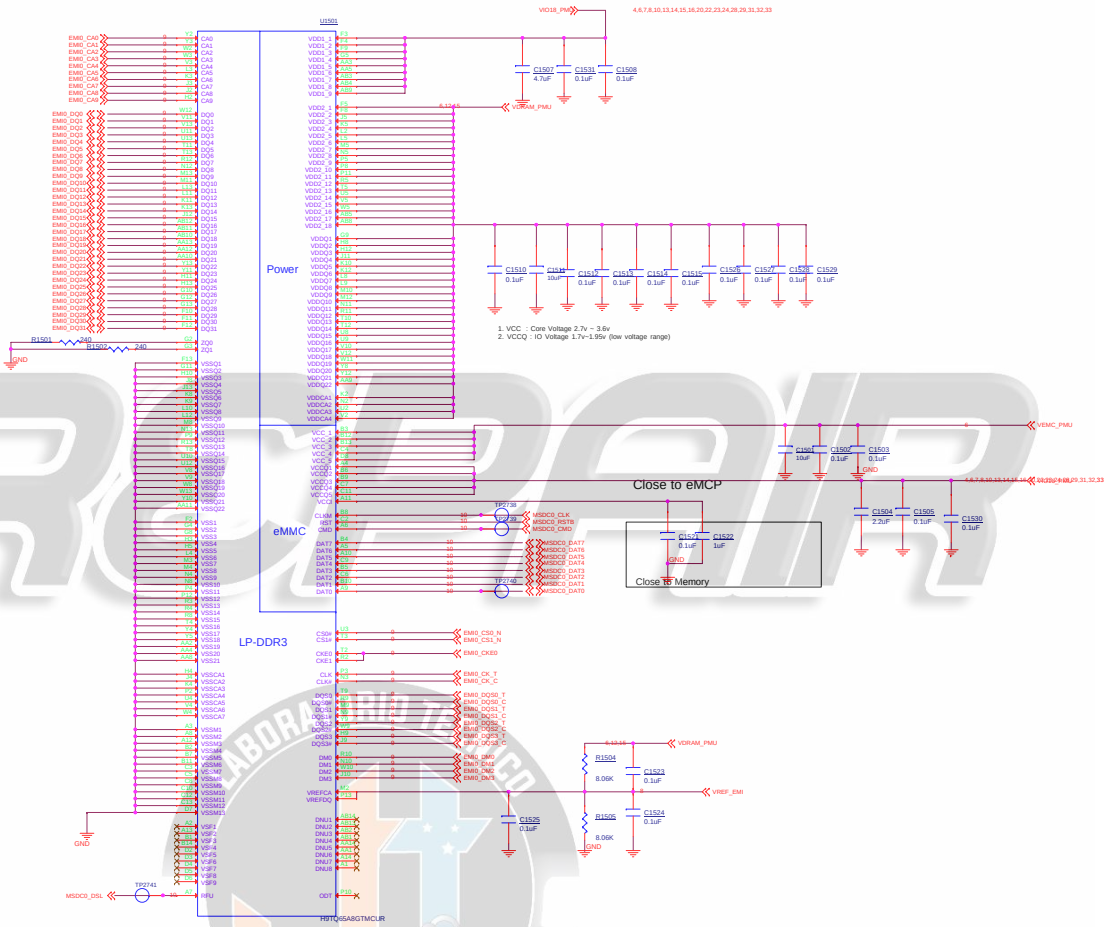

EMMC & LPddr3

Title	Duos_Mainboard		
Size D	Document Number <Doc>		Rev A
Date: Wednesday, April 04, 2018	Sheet 15 of 36		

BATTERY CONNECTOR

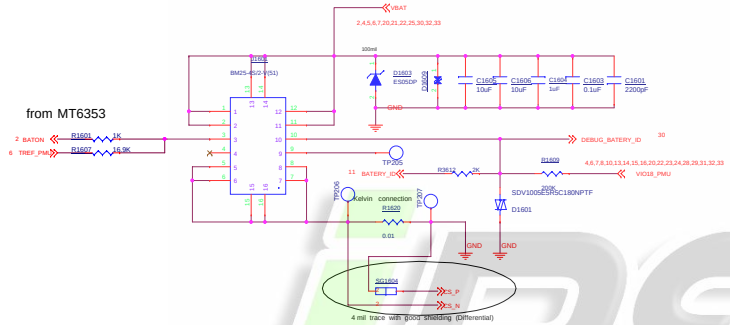

	ID RES	ID Voltage
光宇	22K	0.17V
飞毛腿	200K	0.9V
欣旺达	110K	0.63V

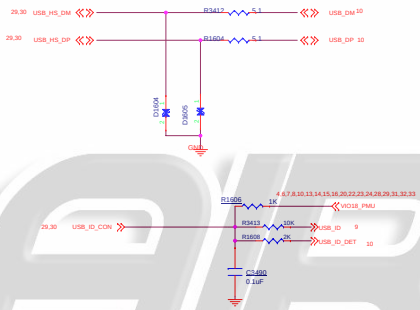

Battery & USB IF

Title	Duos_Mainboard		
Size D	Document Number <Doc>		Rev A
Date: Wednesday, April 04, 2018	Sheet 16 of 36		

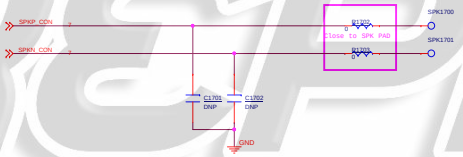

iRSPAIR
LABORATORIO TÉCNICO
MICROSOLDADURA

Speaker & Receiver

Title	Duos_Mainboard	
Size D	Document Number <Doc>	Rev A
Date: Wednesday, April 04, 2018	Sheet 17 of 36	

Handset Microphone 2

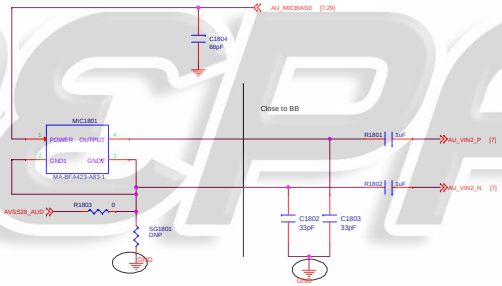

Tie together then single via to main GND

iRSPAIR
LABORATORIO TÉCNICO
MICROSOLDADURA

Second MIC

Title	Duos_Mainboard	
Size D	Document Number <Doc>	Rev A
Date: Wednesday, April 04, 2018	Sheet 18 of 36	

Earphone Audio

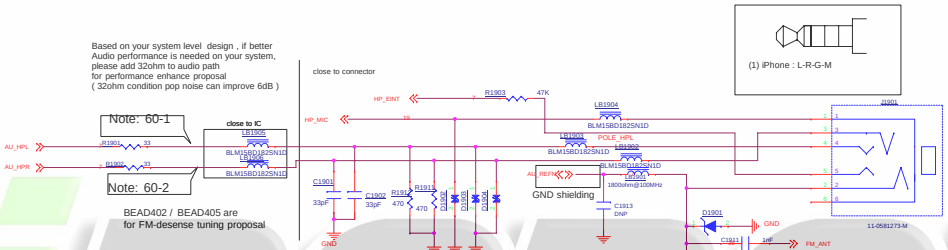

Earphone MICPHONE

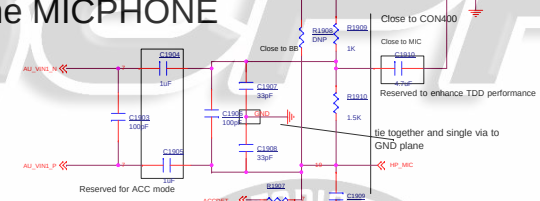

iRSPAIR
LABORATORIO TÉCNICO
MICROSOLDADURA

Earphone

Title	Duos_Mainboard		
Size D	Document Number <Doc>		Rev A
Date: Wednesday, April 04, 2018	Sheet 19 of 36		

GT1151 I2C address: 0X5D (Write:0xBA, Read:0xBB)
or 0x14 (Write:0x28, Read:0x29)

LCM Connector

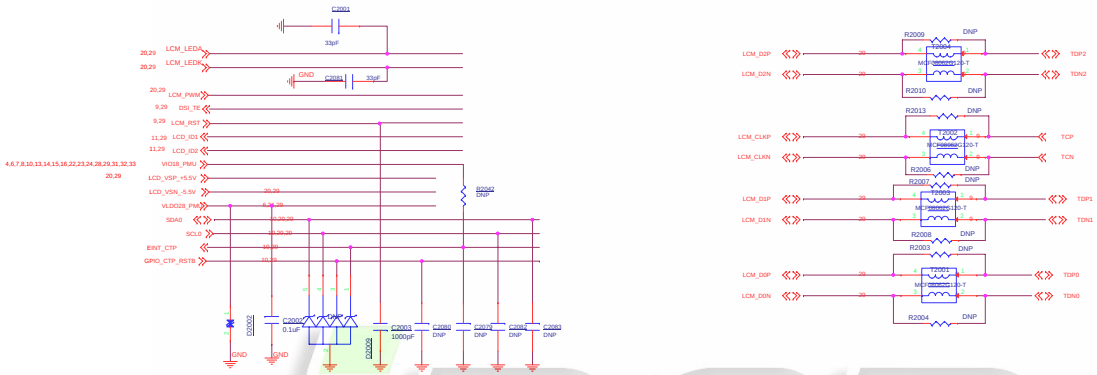

iREPAIR

LCM Backlight LED Driver

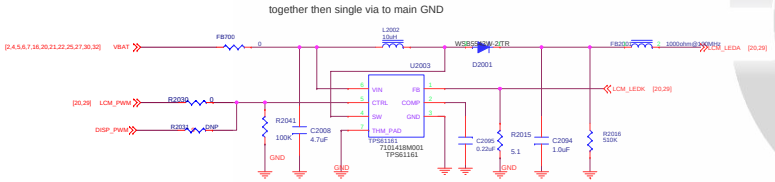

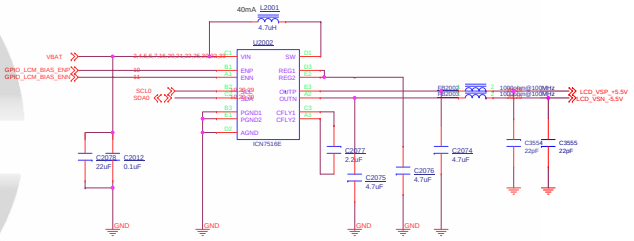

LCM and OVP

Title	Duos_Mainboard		
Size D	Document Number <Doc>		Rev A
Date: Wednesday, April 04, 2018	Sheet 20 of 36		

Rear Camera Connector

Rear camera Qtech(TBD) I2C address: (Write:0x20, Read:0x21)
AF driver DW9714A I2C address (Write:0x1C, Read:0x1D)

Rear Camera - 13M

Rear camera Sunwin(OV13853-GA4A-1B) I2C address: (Write:0x6C, Read:0x6D)
AF driver TBD(DW9718S I2C address (Write:0x18, Read:0x19)
Rear camera Ofilm(OV13855-GA5A-Z) I2C address: (Write:0x6C, Read:0x6D)
AF driver DW9714 I2C address (Write:0x18, Read:0x19)

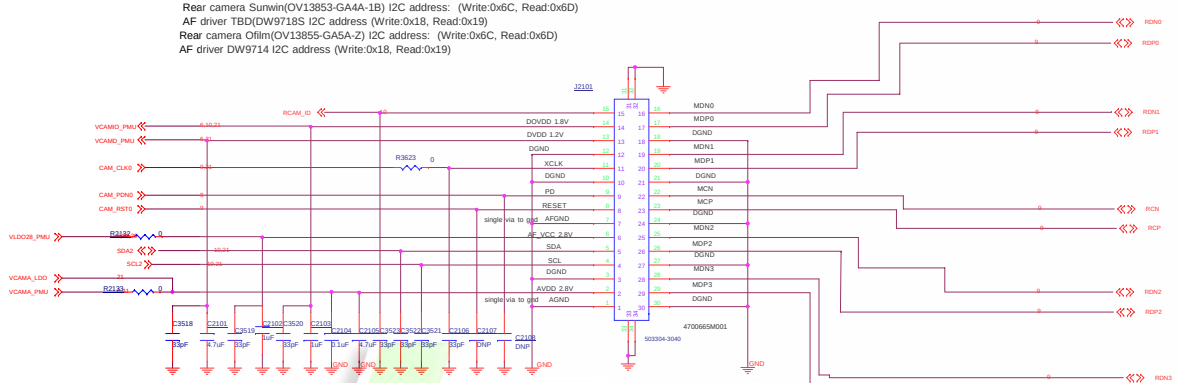

Front Camera Connector

Front Camera - 8M

Front camera (OV8858) I2C address: 0X10 (Write:0x20, Read:0x21)
Front camera ofilm (GC8024) I2C address: 0X10 (Write:0x6E, Read:0x6F

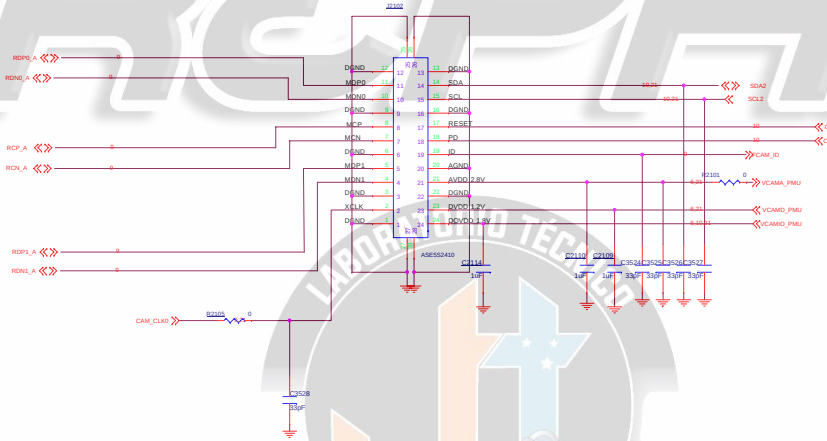

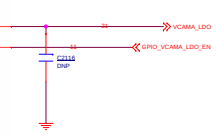

Camera IF

Title	Duos_Mainboard		
Size D	Document Number <Doc>		Rev A
Date: Wednesday, April 04, 2018	Sheet 21 of 36		

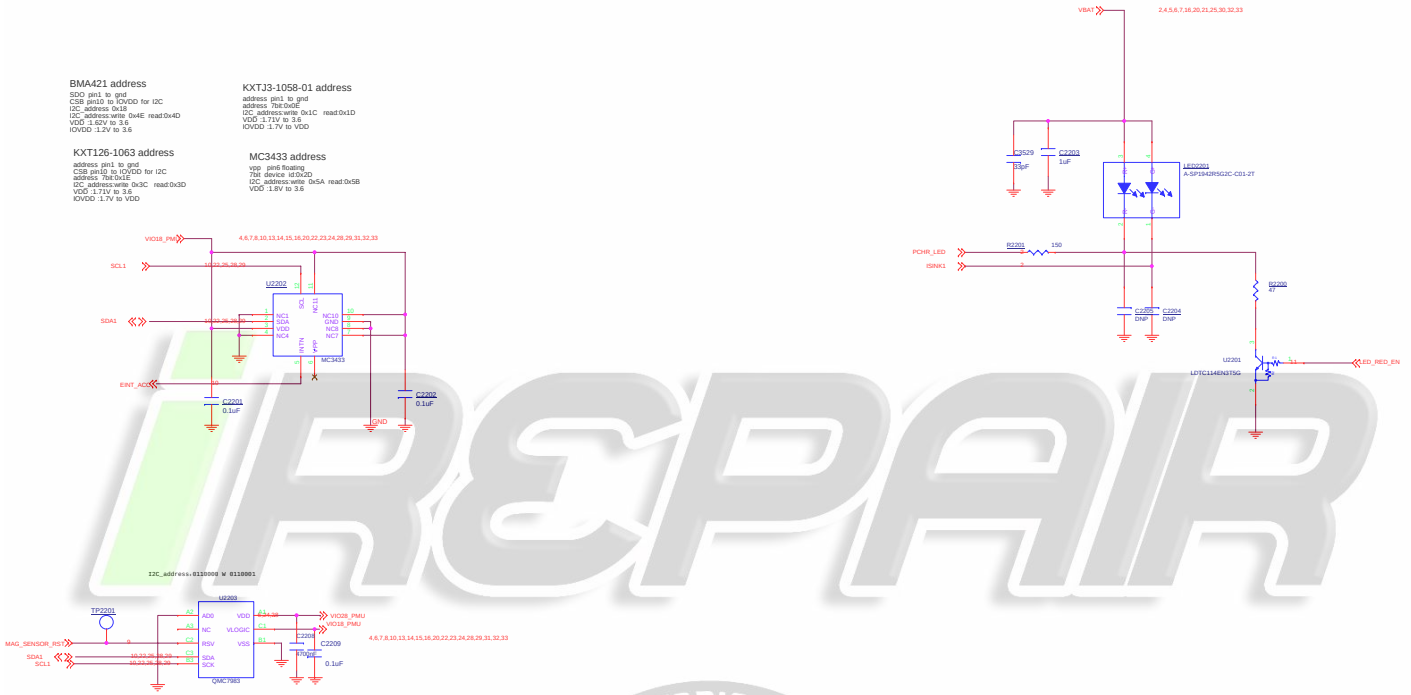

IREPAIR
LABORATORIO TÉCNICO
MICROSOLDADURA

Sensor and indicator

Title	Duss_Mainboard		
Size D	Document Number <Doc>		Rev A
Date: Wednesday, April 04, 2018	Sheet 22 of 36		

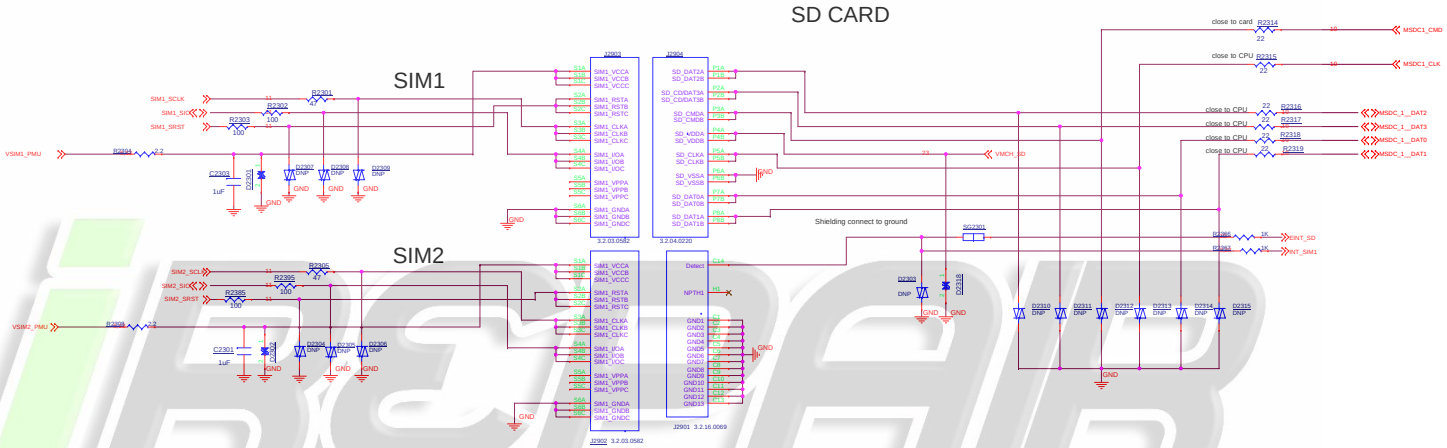

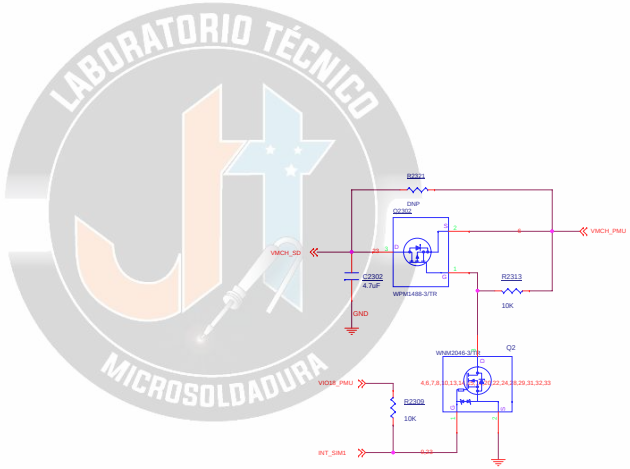

SIM and TF

Title	Duos_Mainboard		
Size D	Document Number <Doc>		Rev A
Date: Wednesday, April 04, 2018	Sheet 23 of 36		

KEY

Volume Up : HOME Key / GND
Volume Down : KPCOL0/GND

DO NOT put pull-up resistor on PWRKEY

Key and Fingerprint

Title	Dura_Mainboard	
Size D	Document Number <Doc>	Rev A
Date: Wednesday, April 04, 2018	Sheet 24 of 38	

Flash LED 5V Boost

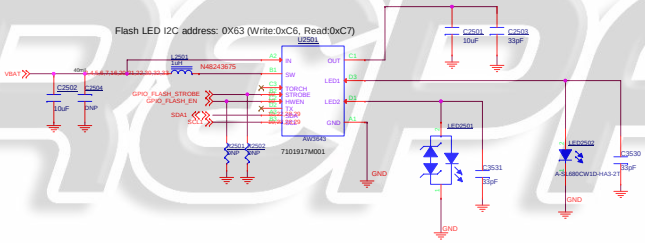

Flash LED

Title	Duos_Mainboard		
Size D	Document Number <Doc>		Rev A
Date: Wednesday, April 04, 2018	Sheet 25 of 36		

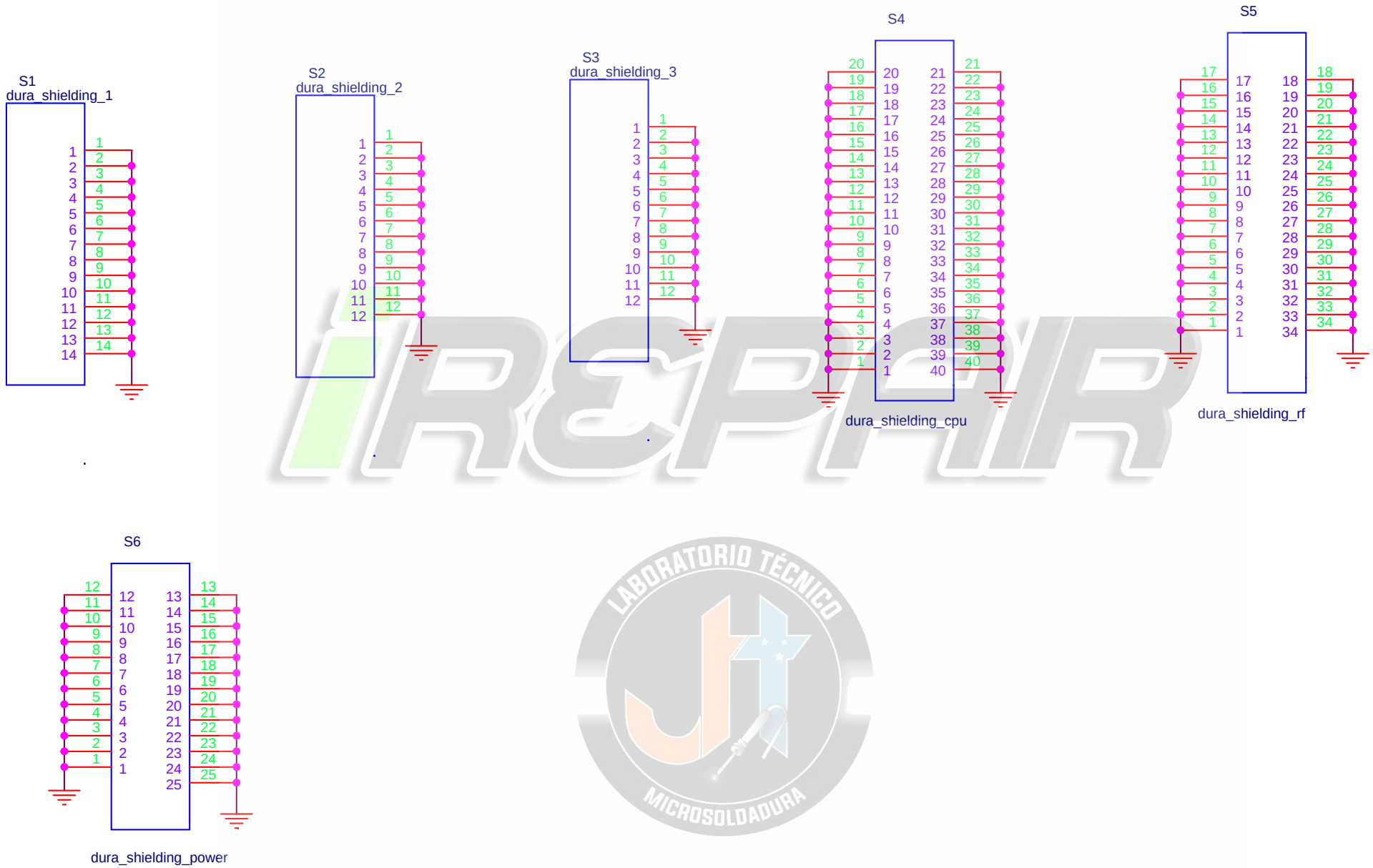

iREPAIR
LABORATORIO TÉCNICO MICROSOLDADURA

Title	<Title>	
Size A	Document Number <Doc>	Rev <RevCode>
Date: Wednesday, April 04, 2018	Sheet 26 of 36	

iREPAIR
LABORATORIO TÉCNICO
MICROSOLDADURA

NFC

Title	Duos_Mainboard	
Size D	Document Number <Doc>	Rev A
Date: Wednesday, April 04, 2018	Sheet 27 of 36	

iREPAIR

I2C slave address: 0X48

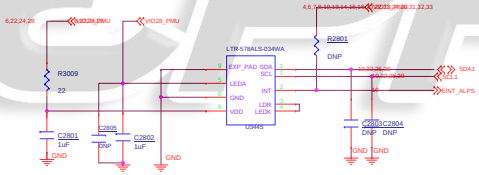

LABORATORIO TÉCNICO
MICROSOLDADURA

ALP-SENSOR

Title	Duss_Mainboard		
Size D	Document Number <Doc>		Rev A
Date: Wednesday, April 04, 2018	Sheet 28 of 36		

LCM Connector

GT1151 I2C address: 0X5D (Write:0xBA, Read:0xBB)
or 0x14 (Write:0x28, Read:0x29)

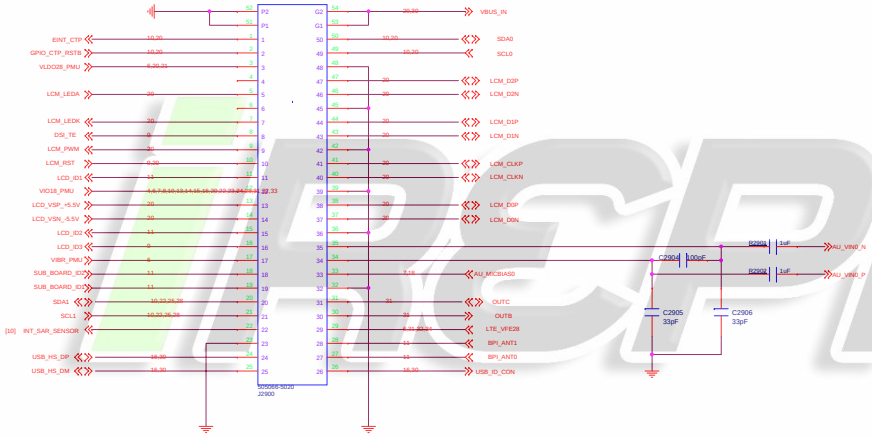

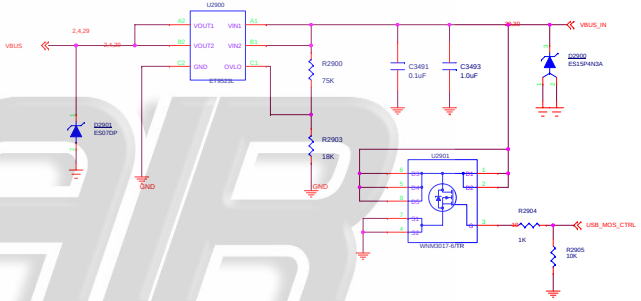

FPC connector and OVP

Title	<Title>		
Size D	Document Number <Doc>		Rev <RevCode>
Date: Wednesday, April 04, 2018	Sheet 29 of 36		

Test Point

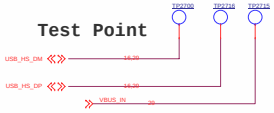

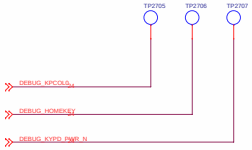

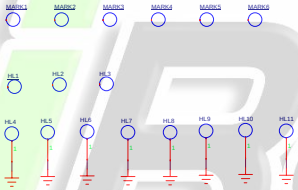

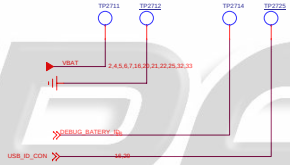

PCBA AUTOMATIC TEST point

JTAG

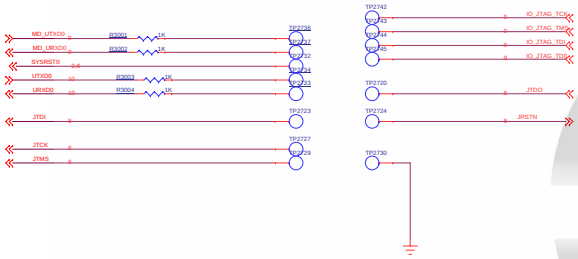

Test point

Title	Duos_Mainboard		
Size D	Document Number <Doc>		Rev A
Date: Wednesday, April 04, 2018	Sheet 30 of 36		

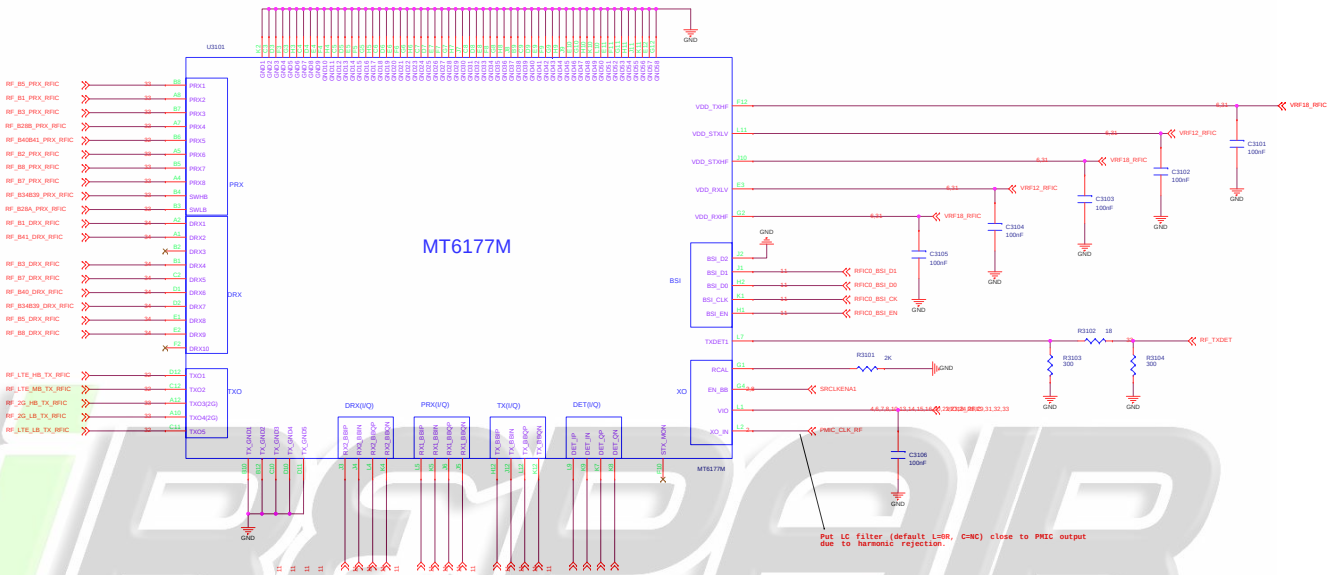

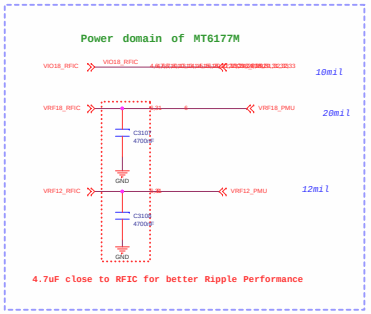

RF MT6177

Title	<Title>		
Size D	Document Number <Doc>		Rev
Date: Wednesday, April 04, 2018	Sheet 31 of 36		

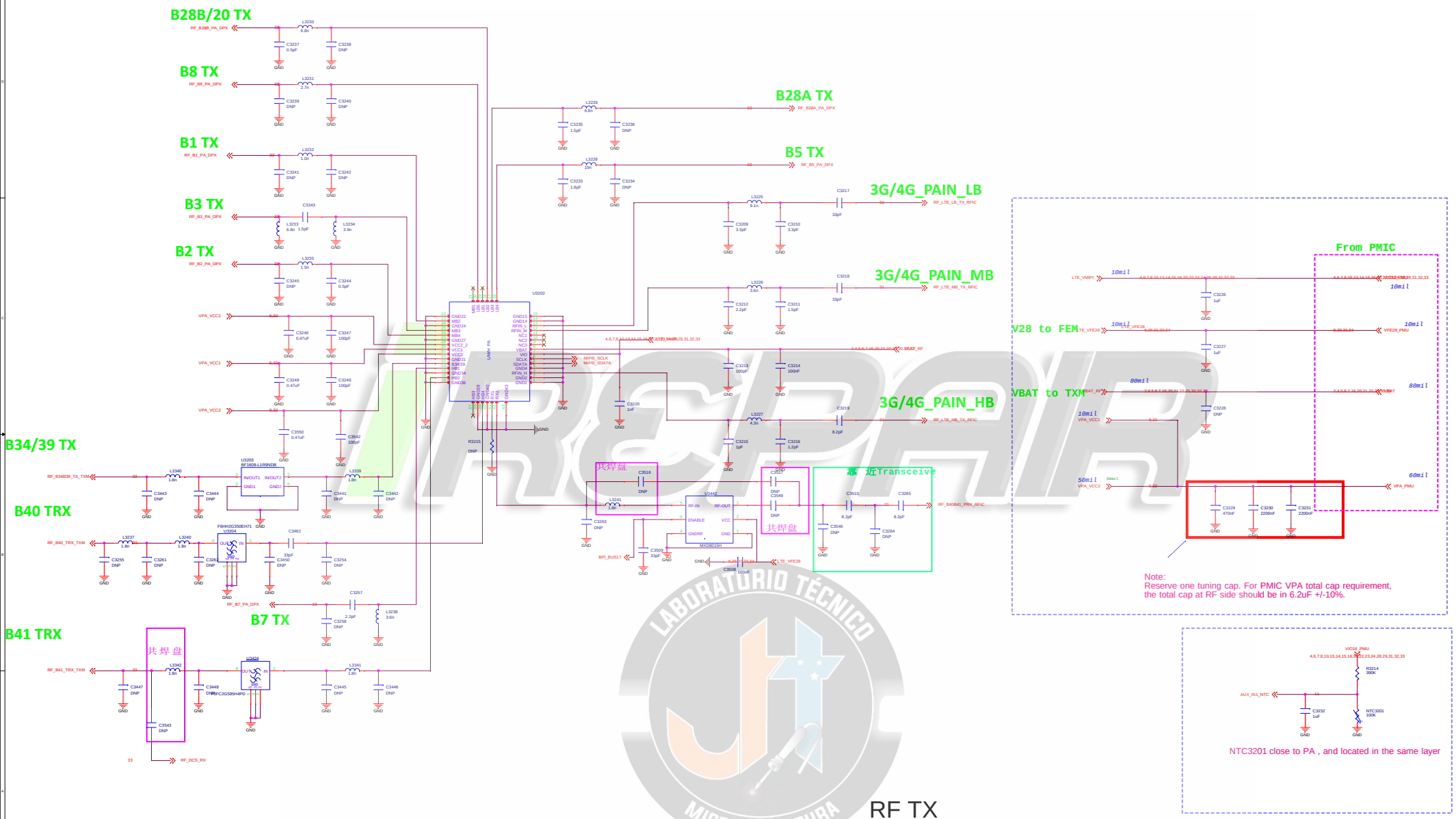

LABORATORIO TÉCNICO MICROSOLDADURA

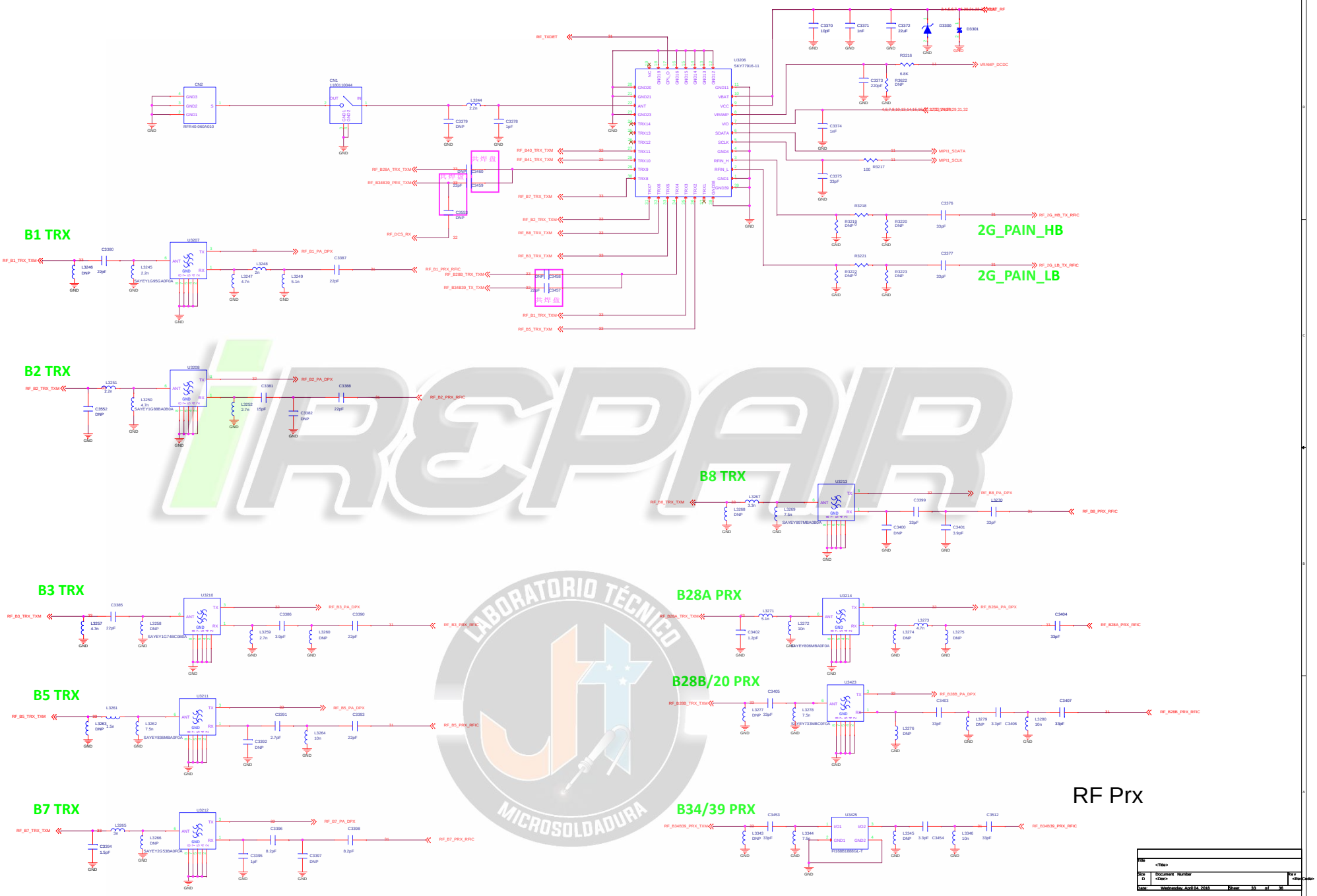

iREPAIR
LABORATORIO TÉCNICO
MICROSOLDADURA

Title	<Title>		
Size D	Document Number <Doc>		Rev <Rev Code>
Date: Wednesday, April 04, 2018	Sheet 33 of 36		

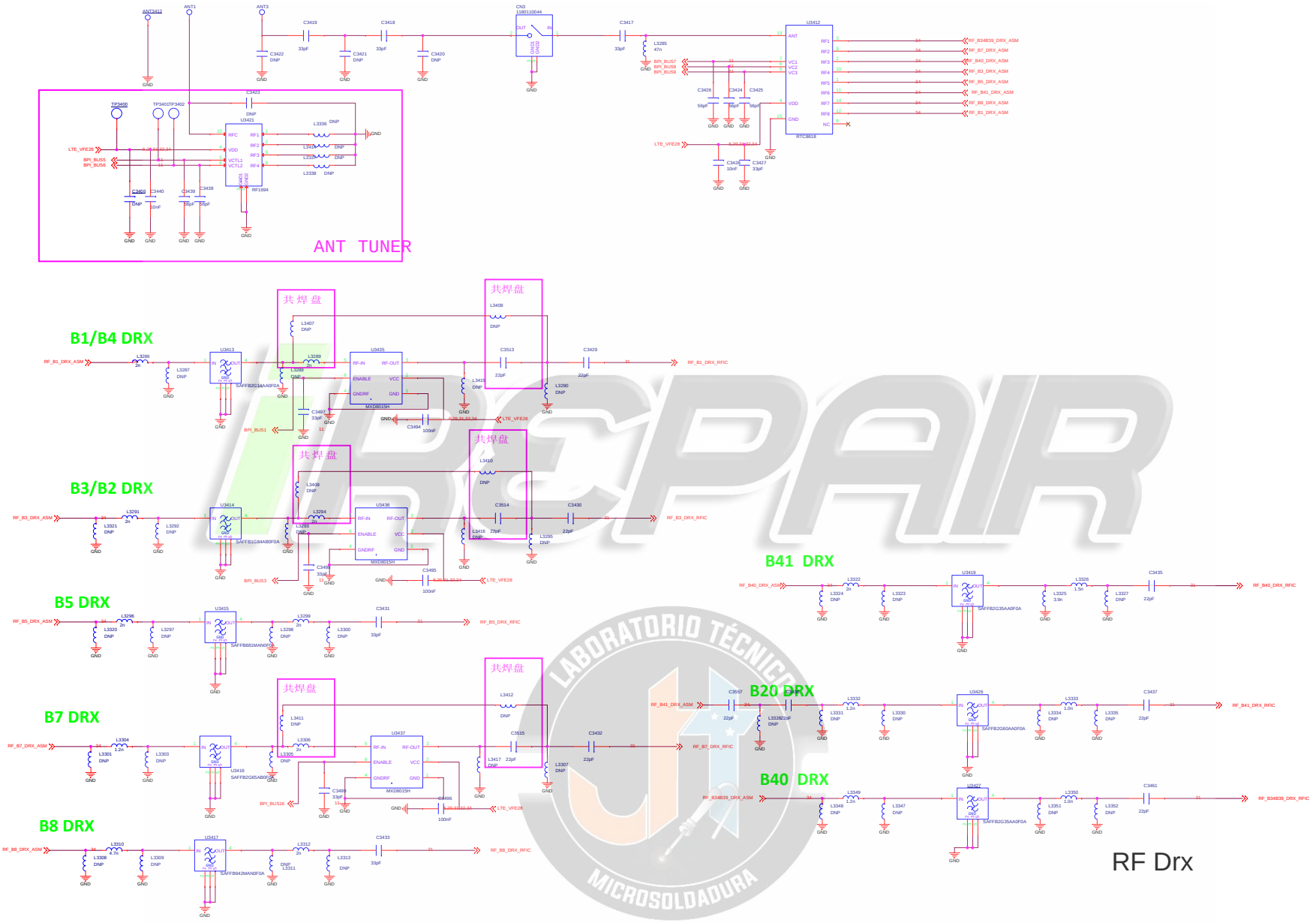

LABORATORIO TÉCNICO MICROSOLDADURA

Title	<Title>		
Size D	Document Number <Doc>		Rev <RevCode>
Date: Wednesday, June 26, 2019	Sheet 34 of 38		

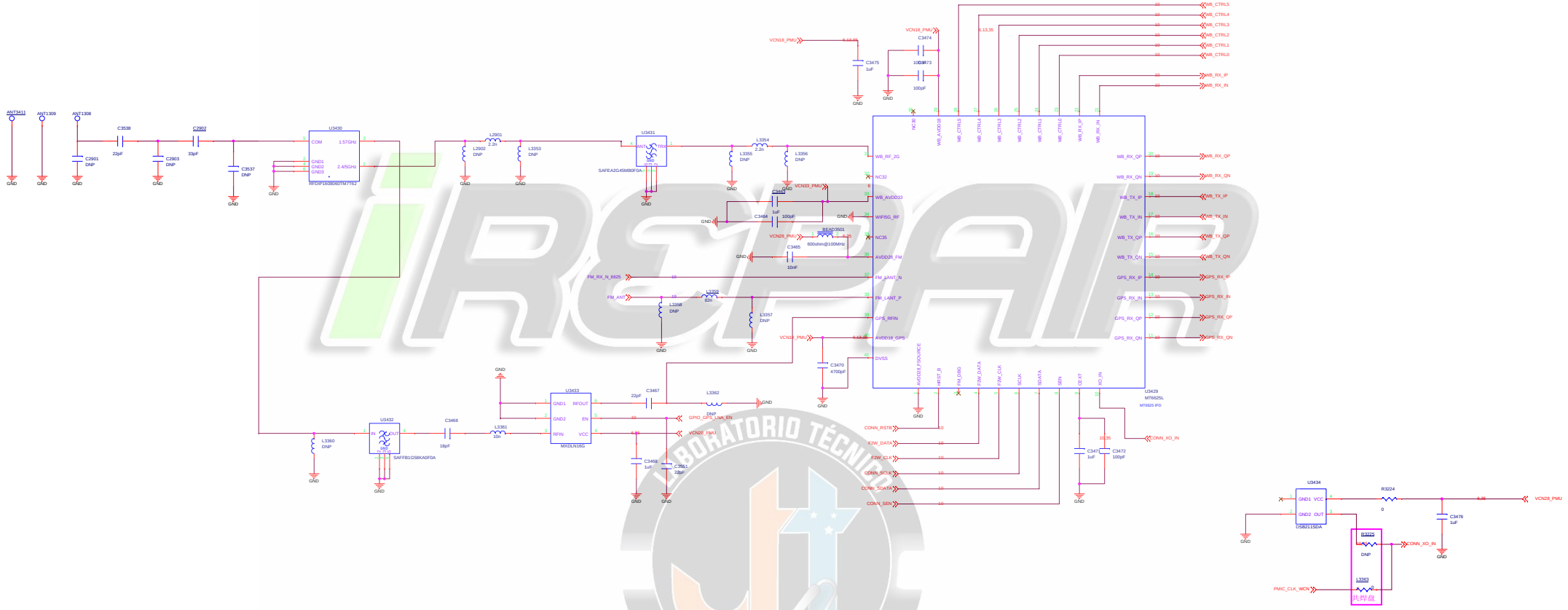

RF WCN

Title	Duos_Mainboard		
Size	Document Number		Rev
Custom	<Doc>		A
Date:	Wednesday, April 04, 2018	Sheet 35 of 36	